DWG NO	TITLE: PRIORITY SEWER TUNNEL – PHASE 2 (PST II) GENERAL ARRANGEMENT MISCELLANEOUS DETAILS – (1)
TCE.10255A–CV–3057–GA–31044	

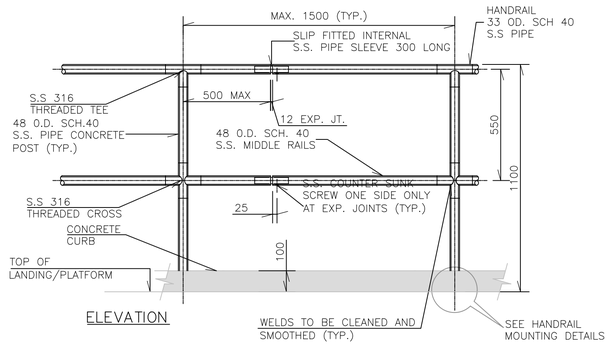

ELEVATION

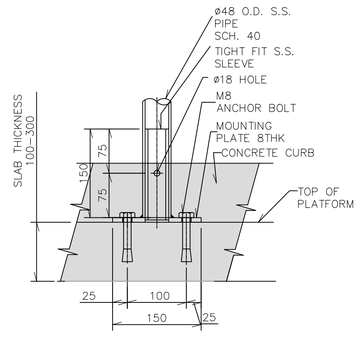

SECTION A–A

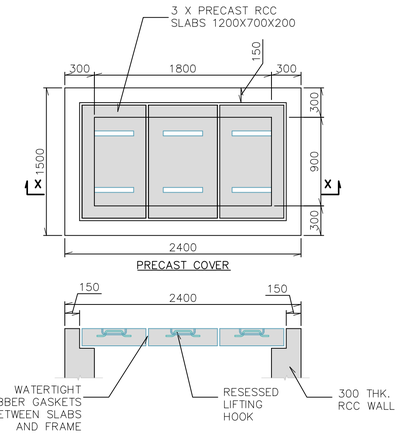

PRECAST COVER

SECTION X–X

SCALE– 1:30

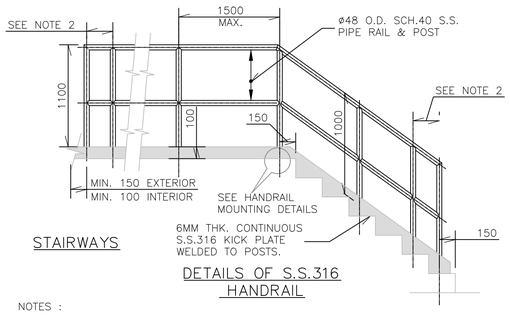

STAIRWAYS

DETAILS OF S.S.316 HANDRAIL

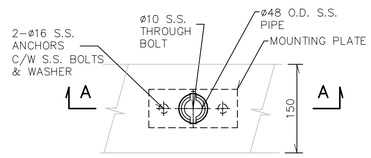

S.S HANDRAIL MOUNTING ON PLATFORM

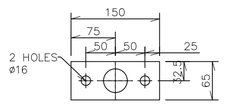

MOUNTING PLATE DETAIL

SCALE– 1:5

NOTES :

1. AT EDGE OF MEZZANINES WITHOUT A CONCRETE CURB, PROVIDE A 6MM THICK S.S. KICK PLATE.
2. PROVIDE TWO POSTS @ 300 C/C @ EACH ENDS OF THE RAILING. IF IT'S NOT CONNECTED TO A SUPPORT.
3. ALL STAINLESS STEEL FASTENERS TO BE S.S. 316.
4. S.S. HAND RAILS SHOULD HAVE MAT FINISH.
5. CONTRACTOR CAN PROVIDE 125 MM x 6 MM THK. S.S. 316 KICK PLATE INPLACE OF CONCRETE CURB.

SCALE– 1:50

KEY PLAN

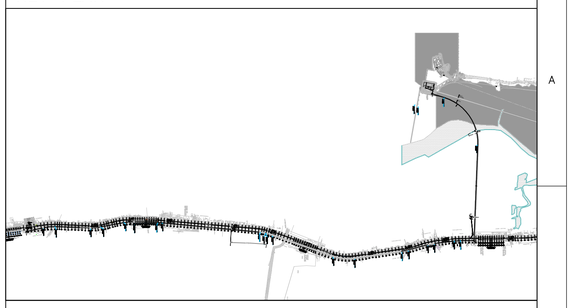

NOTES:

1. ALL DIMENSIONS ARE IN MILLIMETERS AND LEVELS ARE IN METERS UNLESS OTHERWISE INDICATED.
2. ALL CONCRETE TO BE GRADE M50 EXCEPT WHERE OTHERWISE STATED.
3. DIMENSIONS OF PERMANENT STRUCTURAL WORKS SHOWN ARE INDICATIVE. THE CONTRACTOR SHALL DESIGN THE PERMANENT STRUCTURAL WORKS TO THE APPROVAL OF THE ENGINEER, TO SUIT THE CONTRACTOR'S METHOD OF WORKING AND TEMPORARY WORKS. CONTRACTORS TO SUBMIT CONSTRUCTION METHODOLOGY OF TEMPORARY AND PERMANENT WORKS TO THE APPROVAL OF THE ENGINEER.
4. FINISHED GROUND LEVEL TO MATCH EXISTING ROAD LEVEL.
5. THE CONTRACTOR SHALL PROVIDE DESIGN CALCULATIONS FOR ALL LOAD BEARING METAL WORK.
6. THE SIZE AND DESIGN OF MISCELLANEOUS DETAILS ARE MINIMUM REQUIRED. CONTRACTOR TO PROVIDE CALCULATION TO JUSTIFY.

	SIGN.												
	INITIALS												
	REVISIONS												
	SIGN.												
	INITIALS												
	REVISIONS												
	SIGN.												
	INITIALS												
	REVISIONS												
	SIGN.												
	INITIALS												
	REVISIONS												
	SIGN.												
	INITIALS												
	REVISIONS												
PO	SIGN.												
	INITIALS	MPW	CB	CB	CB						SVP	SVP	23–11–2018
ISSUE		DRN	DSN	CHD	CV	EL	IC	ME			PE/PM	APPD	DATE
					CLEARED								

TENDER PURPOSE ONLY

AS SHOWN

'P' (PRELIMINARY) ISSUES ARE NOT TO BE USED FOR CONSTRUCTION / FABRICATION BUT ARE ISSUED FOR LIMITED PURPOSES ONLY AS INDICATED IN THE SMALL BLOCK ABOVE THIS BLOCK.

CONSTRUCTION / FABRICATION WORK IS PERMITTED ON 'R' (RELEASED) ISSUES ONLY.

INFORMATION CONTAINED WITHIN 'HOLD' IS NOT RELEASED FOR CONSTUCTION / FABRICATION. FIELD MUST GET DESIGN OFFICE TO CLEAR 'HOLDS' IN TIME BEFORE PROCEEDING WITH ANY CONSTRUCTION / FABRICATION WORK RELATED TO 'HOLDS'.

Proprietary rights of the information contained herein belong to TCE. This information is intended to be used for the mentioned purpose/project only. In case of misuse of information and any claim arising thereof, cost and consequence will be on the party misusing the information.

FILE NAME : TCE.10255A–CV–3057–GA–31044

MUNICIPAL CORPORATION OF GREATER MUMBAI

MUMBAI SEWAGE DISPOSAL PROJECT STAGE II–PRIORITY WORKS

PRIORITY SEWER TUNNEL – PHASE 2 (PST II)
GENERAL ARRANGEMENT
MISCELLANEOUS DETAILS – (1)

TATA CONSULTING ENGINEERS LIMITED
MUMBAI

SCALE : AS SHOWN	DWG NO TCE.10255A–CV–3057–GA–31044	ISSUE PO
DC & DISC : MUM CV		

SIZE–A1

TCE FORM NO. 091 RO

FILE NAME: F–091–Rev–R0.dwg